Website: http://carc.org.uk/
G3WSC
G6RC
M2F

newsletter@carc.org.uk

Subscriptions via BACS please:
branch code: 40 06 21
a/c: 7131 0321

CRAWLEY AMATEUR RADIO CLUB

Local Repeaters
GB3MH: 145.625/88.5(FM)
GB7MH: 439.6375(D-Star/DMR/Fusion)
GB3NX: 430.850/88.5(FM)
GB3NS: 439.675/82.5(FM)
GB7NS: 439.1625(DMR)
GB3HO: 430.8875/88.5 (438.4875)(FM)
GB3HY: 430.900/88.5 (438.500)(FM)
Local DX Cluster GB7DXS : Telnet 81.149.0.149 Port 7300

Club newsletter

July 2021

Editor: Richard, G3ZIY

Club Covid-19 lockdown "keeping in touch"
Sunday mornings from 1030 local on 28.430±kHz USB
Wednesday evenings from 2000 a Zoom presentation/chat evening

Editorial

It's been great to see so many faces outside Hut 18 in recent weeks. Our Sunday morning open-air gatherings have been a great way to safely meet for the first time in well over a year. Despite the lockdown rules changing on July 19th, we felt that it would be prudent to keep the outdoor meetings going for a few more weeks. This is in part because of the stubbornly high rates of infection across the country. The worst looks to be passing as I write this, and we shall hopefully see much less impact from this latest surge than we did even as recently as January. That being the case, I dearly hope we can return to twice weekly meetings in the Hut soon.

The club was recently bequeathed a considerable amount of radio equipment from the estates of David Harbour, G0EID (SK). David lived alone in East Grinsted and was an avid Amateur TV operator and constructor. We ae in the process of inventorying everything which is taking some time. Once complete we intend to offer club members the chance to buy items at a very competitive price. Much of the equipment is specialised microwave or TV projects and if our own members do not show an interest in some of these items, the equipment will be disposed of through the specialist UK groups and of course at rallies once these get going once more. As well as there being larger items, there is a trove of components which we intend to keep for club members to take and use as their projects require them. It can be annoying to pay postage on a few small components.

Turning to radio, I hope you have all had a great spring/summer on the air. The Sporadic E season has been the best in living memory with many opening on 6, 4 and even 2m. On 6m there have been several evenings of wall-to-wall US stations and many mornings of openings from Europe to VK which is the first for many years. With the Es dying down attention turns to the excellent Perseids meteor shower which is already picking up steam before peaking on 12 August. If you're familiar with FT8 on HF, MS should be straightforward. The simplest mode is MSK144 which is included in the FT8 software we mostly use, WSJT-X. A few 10s of watts to a small horizontal beam will work well.

Take care and see you all soon at Hut 18.

Mike, G0KAD

My QO-100 Lockdown Project

I finally made some QSOs on the Narrowband Transponder on the QO-100 amateur satellite over the Christmas holiday. Time was available to finally get the lockdown project finished.

My QO100 station is based around the Analog Devices Adalm Pluto SDR development system. Quite a popular solution as it can be used both for tx and rx. It's a common alternative to using a transverter and uhf ssb transceiver and a separate rx only sdr, which is another popular approach.

QO100 Transceiver Unit @ G8PQH

Adalm Pluto

The Pluto is a medium cost Software Defined Radio (SDR) system intended as an integrated learning environment for teaching purposes. The manufacturer expects the added bonus that students will end up being familiar with their range of devices and solutions. Unlike alternatives such as the Lime SDR and Lime Mini SDR the Pluto also supports an integrated computing unit running Linux. This implementation supports a command prompt using SSH and supports networking over the USB port,

Adalm Pluto unit

The Adalm Pluto offers one receive channel and one transmit channel which can be operated in full duplex, capable of generating or measuring RF analogue signals from 325 to 3800 MHz, at up to 61.44 Mega Samples per Second (MSPS) with a 20 MHz bandwidth. The PlutoSDR is completely self-contained, fits nicely in a shirt

pocket or backpack, and is entirely USB powered with the default firmware.

Adalm Pluto Inside

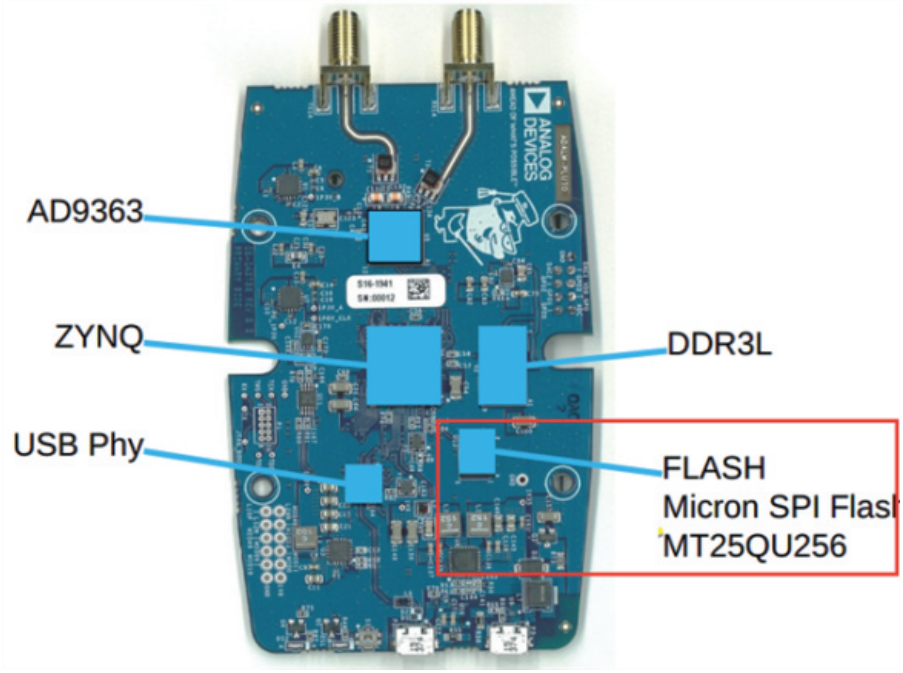

The first USB connector (the middle one) is the USB OTG connector (can be the USB HOST connector (cabled to a USB peripheral), or the USB peripheral connector (cabled to a USB Host)). The second USB connector (the one on the side) is for power only when running in Host mode. Separate Rx and TX ports are connected to the AD9363 transceiver and the system is controlled by the ZYNQ "System on a Chip" (SoC). Internally this devices supports an ARM cortex processor plus programmable logic and Input/Output.

As the Pluto is supported by the popular SDR software SDR Console it is very nearly ideal for our purpose. It can transmit at 2400MHz and it can receive the output of a standard 10GHz tv satellite LNB which will fall around 739MHz. The receive noise figure is good (<3.5dB) so sensitivity will be OK. It has two main drawbacks we need to overcome. Firstly the power output is tiny, just a couple of milliwatts. Secondly and more seriously the temperature stability of the main frequency reference the device has (a 40MHz TCXO) is only 25 parts per million. At 2400MHz this works out at +/- 60kHz indicating there will be too much drift for practical narrowband SSB operation. (Help!) We will overcome both of these limitations.

Transceiver Hardware

The Pluto needs a number of supporting modules which I assembled into the transceiver box shown at the top of the page. The interconnections are shown in the diagram below.

Pluto based Transceiver Unit.

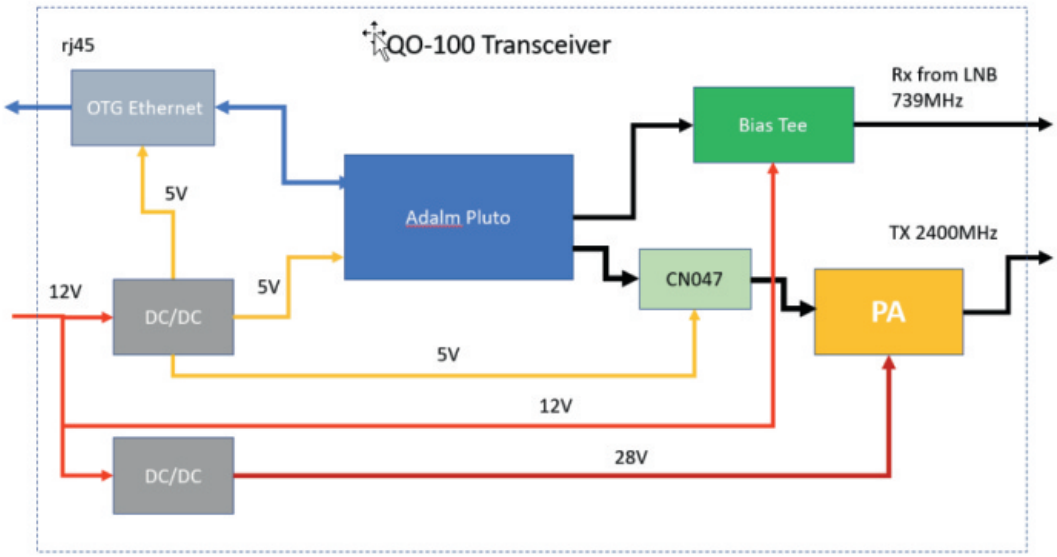

The additional components I used were:

- 12V to 5V DC/DC converter. Source Ebay:
- 12V to 28V DC/DC convertor. Source Ebay:
- OTG USB to Ethernet Adaptor
- 2400MHz output filter (Source Passion Radio)
- Modified Adalm Pluto Unit
- CN0417 Pre Amplifier. Source Passion Radio
- Bias Tee Unit. Source Passion Radio
- SG Labs high gain 20W amplifier unit. Source SG Labs

Key Issues Encountered

Low Transmit Power. The low power output of the Pluto is first amplified by the Analog Devices CN0417 amplifier unit. This unit is designed for use with the Pluto in the 2400MHz band and includes band filtering. It can deliver about 100mW. It runs quite hot. The output of this amplifier is fed into the SG Labs 20W amplifier (V3) which needs about 50mW to drive the amplifier to full power. The SG Labs unit is very nicely made and includes not only a voltage test point for forward and reflected power on the output but also an indication of input power. The output power is 20W when powered from 28V. This is more than you need for narrowband operation. https://www.sg-lab.com/AMP2400v3/amp2400_v3.html

Frequency Stability. To get over the poor frequency stability you need to replace the standard TCXO on the Pluto with a higher spec unit, (or feed a GPS locked 40MHz reference signal from a GPS disciplined oscillator GPSDO). I haven't much experience with SMD components and my eyesight is not as good as it was, so I opted to buy a Pluto unit already fitted with a 40MHz TCXO with a 0.5ppm spec as opposed to the standard 25ppm unit. (From DJ4ZZ http://www.jdelektronik.de/ENGLISH/index.html) The existing TCXO had been removed and a daughter board fitted with the new smaller TCXO soldered onto this board. All was well until I stupidly managed to damage the Pluto board by breaking the USB connector. **Don't do this yourself.** It's quite fragile. My attempts to solder the connector back were unsuccessful. After a lot of frustration realising my Pluto was now unusable, I ended up buying a standard off the shelf Pluto unit. I had then had the job of unsoldering the standard TCXO and swapping over the high spec unit from the original DJ4ZZ Pluto board, So I still ended up doing what I was trying to avoid in the first place! Luckily for me it worked and I have a stable transmission.

Push to Talk (PTT) is an issue. V3 of the SG Labs amplifier has an RF VOX circuit to:

switch the PA into transmit. It's fast acting with an adjustable hang time as well as a manual PTT line, pulled to ground for transmit. Without an amplifier with this arrangement some stations manually switch the PTT or more likely bias the PA into transmit the whole time. This is because the standard Pluto firmware and SDR console doesn't seem to support generating a PTT output. On my Pluto I have installed the F5OEO tv transmission firmware. This still works fine on the NB transponder with SDR

Console but has a range of extra facilities. There is information to suggest that you can set one of Pluto IO lines to achieve this and I have GPO and GP1 wired up to a small relay board piggy backed on the unit. I had trouble getting this to work, so the RF VOX and the amplifier is very useful. Other stations have got it working fine apparently so I will just need to come back to it in the future.

TV Transmission

The F5OEO Pluto firmware is one way of generating a DVB-S2 digital television signal that can be sent via the wideband transceiver. Using the OBS video streaming software to send video to the Pluto it is possible to generate a signal at a range of symbol rates. Unfortunately at the moment G8PQH TV transmission range is about from one side of the room to the other :)

https://github.com/F5OEO/datvplutofrm

To send tv via QO100 even at low symbol rates such a 15kS/sec I am likely to need a 1.2m dish and probably 50W into it. Higher powers are possible with modified 3G base station amplifiers but the next step will be to develop a practical solution with a bigger dish that suits the QTH. At the moment I only have a 60cm dish that I have been experimenting with mounted on a tripod.

LNB and Antenna Hardware

The LNB I am using I obtained from DJ4ZZ. Its a Quad LNB Golden Media GM204 modified with a stable TCXO.

- TCXO 0,5ppm
- IF: 739,550 MHz
- H/V polarisation switched 12V/19V

My unit was already fitted with the DJ4ZZ POTY antenna that made setup straightforward. I noted though he still does the brass POTY antenna and LNB as separate items on his website he doesn't seem to do the POTY antenna ready fitted to the LNB. I don't think it is hard to do.

DJ4ZZ POTY and LNB

Here's a picture of the 60cm dish and tripod being tested out the spare bedroom window over the Christmas holidays in 2020. The slightly disassembled transceiver unit can be seen on the bed.

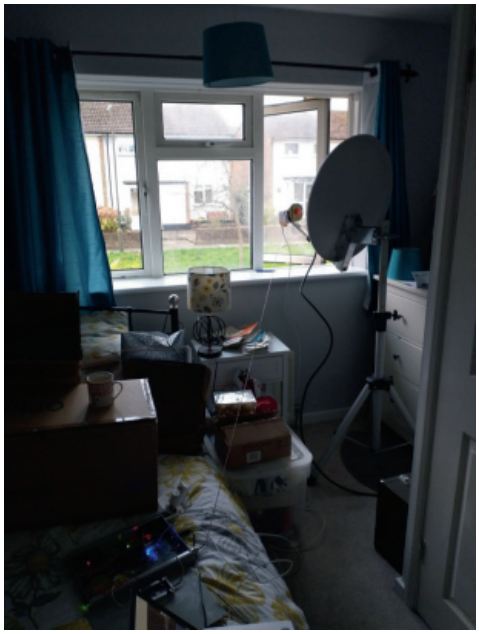

Temporary home for the dish

SDR Console software

I am using Simon Brown's G4ELI excellent software SDR Console to drive the Pluto for both TX and Rx https://www.sdr-radio.com/

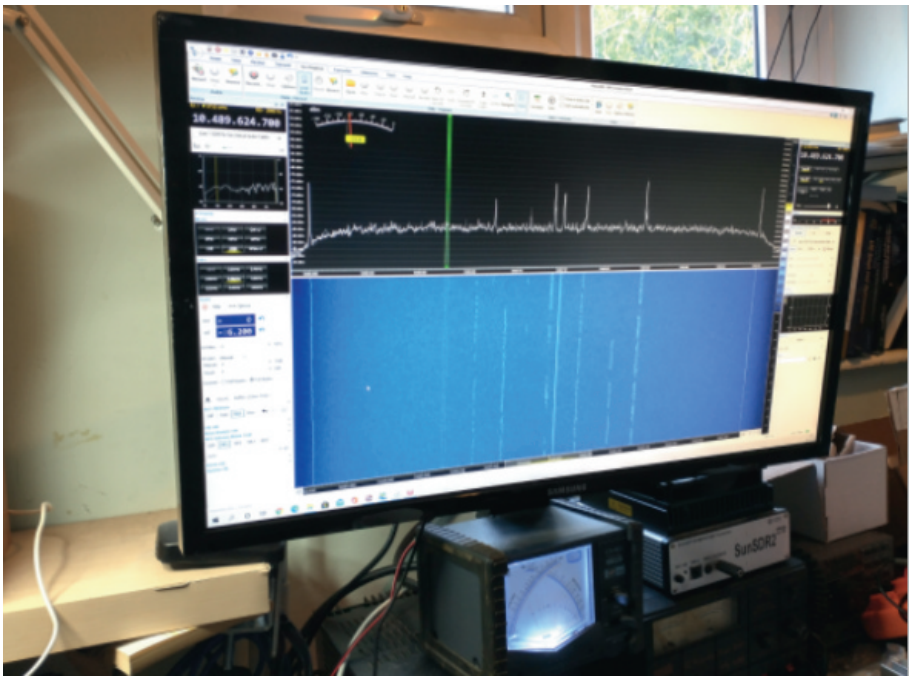

SDR Console showing activity on the Narrow Band Transponder

Operating on QO-100

Operation is full duplex with a substantial delay, so your first task is to hear your own signals on the downlink. My repetition of "Mary had a little Lamb" to myself was interrupted by a call from Prem VU2OLU in Kerala southern India. Not bad for a first contact!

I made quite few QSOs between Christmas and New Year whilst I had the dish in its temporary location pointing out the spare bedroom window. A notable one was with PY5ZUE close to the border with Argentina and Paraguay, beyond the normal service area of the satellite. Conrad claimed to be about a third of a degree below the satellite horizon. He was weak and there was QSB on his signal. Only worth remarking upon because unlike HF the QO-100 signals normally don't fade and have a constant signal to noise ratio.

Frank G8PQH

StickVise PCB Holder

This simple PCB holder comes highly recommended. Operation is I think self explanatory. It is easily flipped over and turned round but has enough mass to stay in place when soldering or prodding around testing with the multimeter or oscilloscope probes. The low profile means you can have your hands steady resting on the desk.

The jaws can be replaced, and you can design your own custom jaws and 3D print them should the need arise.

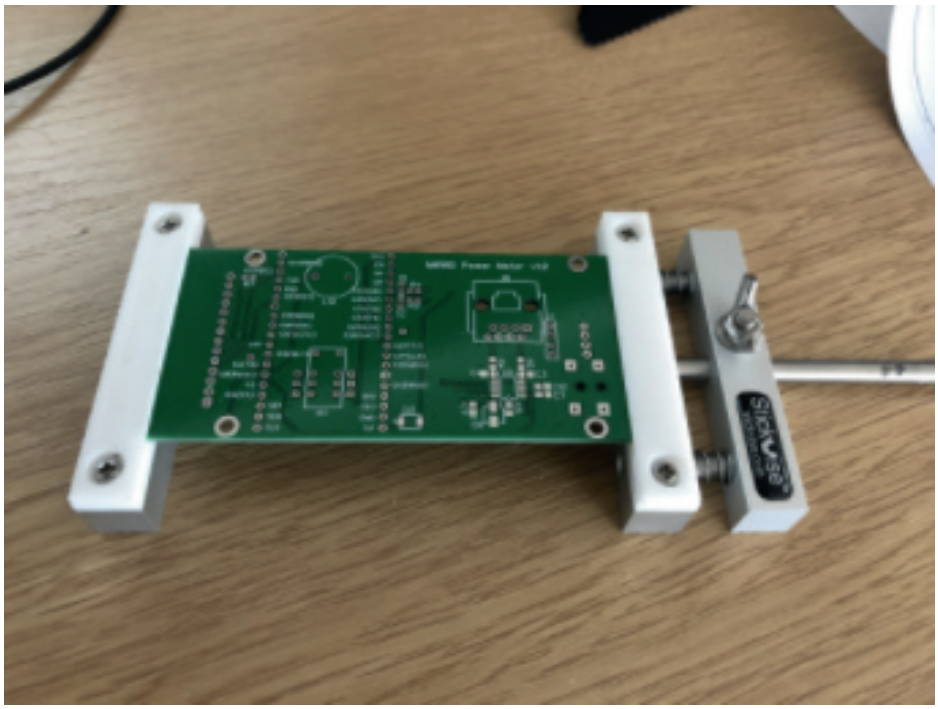

The downsides are that the standard plastic jaws melt so the optional PTFE ones are almost essential, PCB with tall components on can foul on the central bar and the excessive cost but having used it I would not be without.

It is available from the PiHut, amongst others at £28.7, PTFE jaws cost a whopping £14.40 on top.

The high cost makes it tempting to make your own – I have seen a 3d printed design that used an elastic band as the spring. Low quality clones seem to be appearing on the auction sites.

David, M0WID

"The view from the top" (of the mast)
© Adrian, G3VJM

Radioberry

The Radioberry is a small PCB "hat" that can plug on the top of a Raspberry Pi (Pi4 recommended – it can be made to work on a Pi3B) to create an SDR.

The Radioberry is a fork from the Hermes Lite (before it became the HermesLite2) project, and essentially the board comprises some power regulators, a Cyclone 10CL25 FPGA and the AD9866 12 bit broadband modem front end that provides the fast A/D and DAC required to produce a direct sampling 4 slice SDR covering 0-30MHz. Output power in transmit is at a low level, around 15dBm.

The design is open source and can be built at home. All information is available from https://github.com/pa3gsb/Radioberry-2.x.

Ready built Radioberry boards have recently become available on AliExpress at a cost of around £65. There are variations – the one I have came from Aursinc and has the

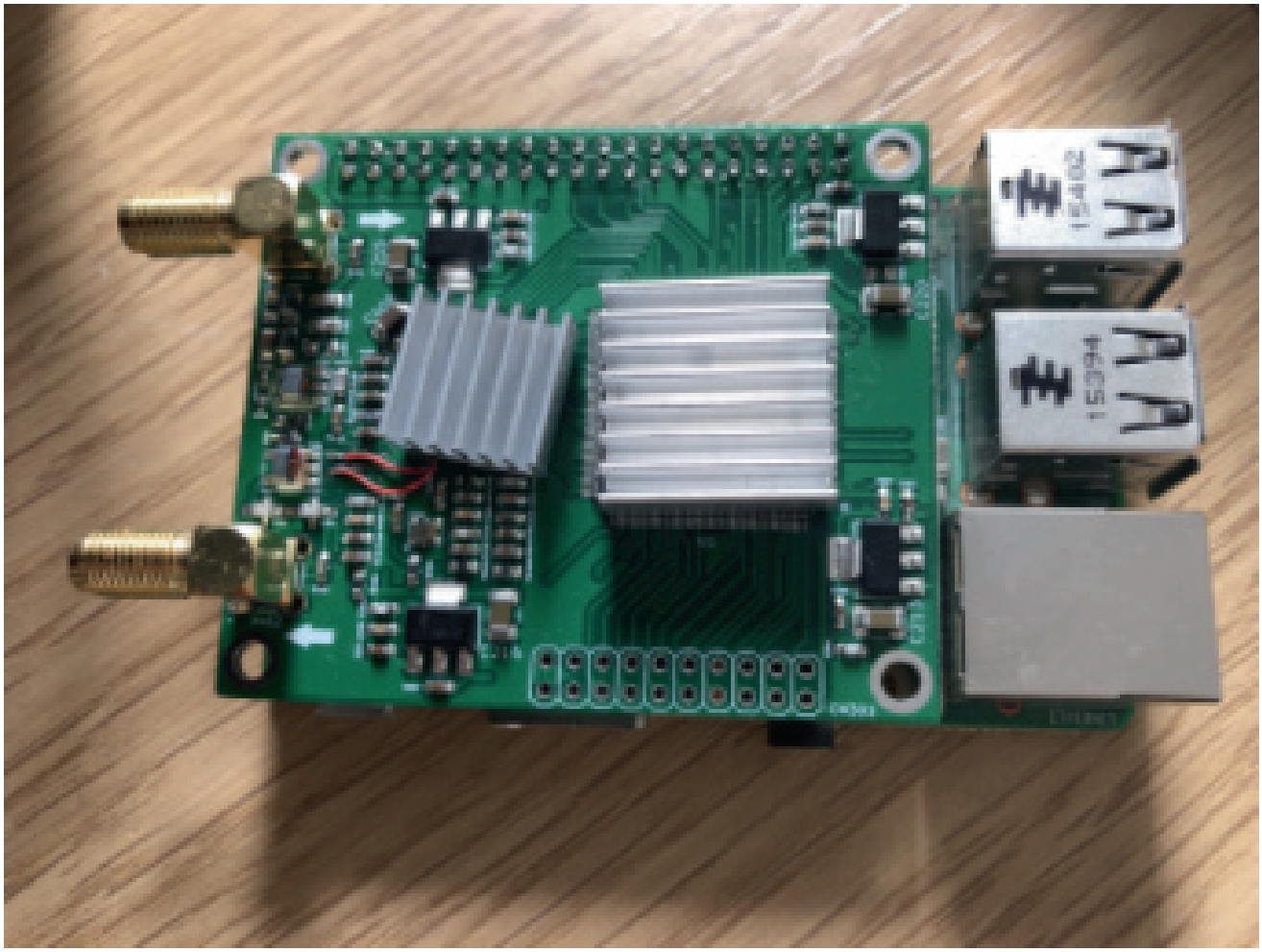

latest PCB revison, some others on sale have an earlier revision where there is a risk of a fault due to insufficient clearances to allow for the PCB manufacturing tolerances.

The heatsinks are essential (and are included) – I would also suggest a fan is needed – the AD9866 gets too hot to touch, unlike the HL2 which has a much bigger PCB to distribute the heat.

The Radioberry together with Raspberry Pi 4 can be used together with other software on a PC such as SDR Console, Spark SDR or PowerSDR, or can be built these into complete standalone radios, by adding on a touch display, bandpass filters and a PA stage using PiHPSDR software.

David, M0WID

This picture from Adrian, G3VJM, is of a youthful Mike, G3LHZ. I do not recognise the gear.

Another picture courtesy of Adrian.

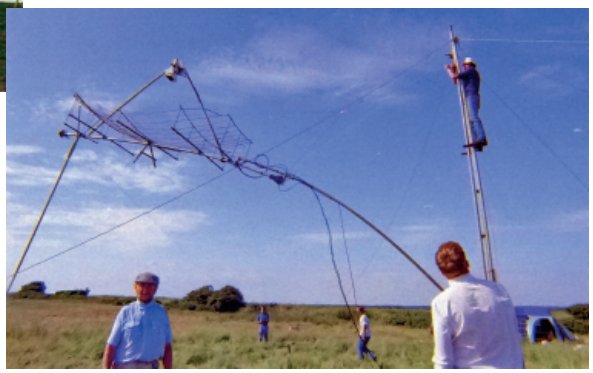

From Adrian's extensive collection, a scene from some field event. I am struggling to determine what polarisation they were trying to achieve though!

Congratulations to one of our youth Members on his recent 18th birthday. My picture shows Caspar, M6OWI, learning an essential man–skill — BBQing! I can vouch that the result was quite delicious. Other beers are available...

COMMITTEE

Hon. Chair	Mike Davies	G0KAD
Hon. Vice Chair & QSL Manager	John Pitty	G4PEO
Hon. Secretary	Phil Moore	M0TZZ
Hon. Treasurer	Alex Sheppard	M1YAP
Hon. Newsletter Editor	Richard Drinkwater	G3ZIY
Committee Member	Richard Hadfield	G4ANN
Committee Member/Hon. Events Secretary	Stewart Bryant	G3YSX

ML&S Official Distributor of mAT Products

These beautifully crafted precision instruments offer performance and dependability to the Ham Radio market. The complete range of mAT tuners are available from stock.

MAT-TUNER®

The backs of each tuner on top are not to scale.

mAT-10
Automatic Tuner For QRP Transceivers
£179.95

ML&S Official Distributor of mAT products

mAT-30
Automatic Tuner For YAESU Transceivers
£139.95

mAT-180H
Automatic Tuner For ICOM
£174.95

mAT-K100
Automatic Tuner For KENWOOD & ICOM Transceivers
£189.95

mAT-125E
General Automatic Antenna Tuner
£169.95

mAT-40
Automatic Antenna Tuner
£244.95

New Version! mAT-705Plus
Micro Automatic ATU for IC-705. £219.95

Full Specifications at HamRadio.co.uk/MAT

MARTIN LYNCH & SONS LTD. The WORLD'S FAVOURITE HAMSTORE

ML&S

www.HamRadio.co.uk

SAFE ONLINE SHOPPING. E&OE

0345 2300 599

Wessex House, Drake Avenue, Staines, Middlesex TW18 2AP
E-mail: sales@hamradio.co.uk
Opening Hours: Mon - Fri: 8.30am to 5pm. Sat: 9am to 4.30pm.
International Tel: +44 1932 567 333

Have you watched ML&S TV yet?
Every week there's something new. One simple URL
www.MLandS.TV YouTube

FOLLOW US ON TWITTER AND FACEBOOK
HamRadioUK

Have you listened to our ML&S Podcasts yet?
Listen right now on Spotify, Apple Podcasts & Pocket Casts
Apple Podcasts Pocket Casts