CARC

CRAWLEY AMATEUR RADIO CLUB

News Bulletin August/September 2018

In This Issue:

Sunday September 9th is the date for the Microwave Round Table

Note from the Editor

The cover picture on this issue was taken at Swingate during VHF National Field Day, more news about this later.

The deadline for articles to be included in the next issue (due for publication 1st October) is 23rd September, all contributions gratefully received and many thanks to those who contributed to this edition:

G3VKW

M0TZZ

G3ZIY

M0IJP/VK5ZFJ

G6NKQ

G8DOH

Chairman’s Chatter

Hi all,

Another pretty Flat month on the HF bands, the only DX was the KP1 Baker and Howland Islands added to the G3VKW logbook, however on 6m I manged a new country (entity) which was 4U1ITU in Geneva, I thought I also had a QSO with Z68M in Kosovo but I am not in the log (N.I.L.). Presently there is an operation from Micronesia - V6U, I managed a QSO on 20m CW but he was really very very weak.

The Contest team did their best for VHF Field day again this year, but had issues with the 70cm Antenna system, so they are a little disappointed but I am sure they will sort out the issues and be ready for next year’s contest.

We have a new active amateur in the club, Casper has passed his Foundation Exam and is now M6OWI well done Casper. A nice CW Call sign… !!

In September mark in your diaries that we are again hosting the Micro Wave Round Table, so perhaps plan to come down to hut 18 and attend some of the lectures. There are normally lots of goodies for sale, like die cast boxes to name just one.

Also later in Sept. we have the rescheduled Surplus Equipment Sale. Stewart G3YSX is wielding the Gavel. On that note we have acquired quite a bit of Equipment from a local amateur who is giving up the hobby, there is a partial list up in the clubhouse notice board, and I will send out an email list shortly as it has only recently arrived.

We are hosting the HARC/ CARC challenge this year in November, so if anyone has a “dastardly cunning” radio or electronics conundrum to unleash onto the teams please contact me.

I wonder whether we have anyone in the club, who would like to take on the task of “Web Master” We need someone to keep the Club’s website much more up to date. Not too onerous, perhaps 15 to 30 minutes per week. If you are interested please contact me.

The “novice“ club station now has a new antenna, so is operational again after a very long period. Thanks for this goes to Malcolm G3NZP.

On another topic, Have we got any Kitchen re fitter’s in the club? Our kitchen has seen better days, so if you have this talent, then please contact me, or any committee member.

Remember turn on your rigs and make some QSO’s, we are a communication hobby, so let’s communicate.

73

Keith G3VKW Chairman.

VHF/UHF Contesting with CARCRATS

The Crawley and Reigate Clubs have been active in VHF and UHF contests since the 1960's. In recent years they have combined in a joint group Crawley Amateur Radio Club-Reigate Amateur Transmitting Society or CARCRATS for short.

We operate in the Open Section of the major contests from a site overlooking the English Channel, near Dover, an easy drive from Crawley, and which allows large numbers of contacts into the other European Countries, even when propagation is poor. For those who have believed what is said in the Radio Amateur's Examination training that VHF is restricted to line of sight contacts, our average distance worked is greater than 350 km and best DX is usually greater than 900km, sometimes much greater- 7,701km on 6m in VHF NFD this year.

In 2017 we came 2nd in the March 2m and 70cm Contest, won the May 2m Contest, won VHF NFD, won the 6hour Open Section of the September 2m Trophy Contest and won on 70cm in the October UHF Contest.

So far this year we did not participate in the March 2m and 70cm Contest because of the snow and came 2nd in the May 2m Contest.

The big event of the year is VHF National Field Day. This is a huge logistical and operating challenge with complex multi-aerial array systems to be fielded for 6m, 4m, 2m and 70cm, together with the new 8 x 28ele array for 23cm; multiple receiver systems for 2m and 70cm and a collection of generators to power everything. All of this has to be assembled and tested in the 24 hours before the 14.00 Contest start time. The IT challenges are also considerable with three separate station locations. This year, Mike G0KAD prepared a wireless intranet for the stations, with external connection for access to DX Cluster, ON4KST and other requirements. Having the 8 lap-tops pre-loaded and tested with the required software was a major advance on previous years and all worked well except for occasional wireless link drop-outs due to obstructions.

The new multi-aerial array 70cm system worked very well, but we had problems with the new 23cm system- eventually traced to a faulty connector- so we did not include contacts on that band in our entry (for the Open Section, the best four band scores are used).

The weather was beautiful, no thunderstorms or other problems and over the 24 hours of the contest we achieved 103 contacts on 6m, 96 on 4m, 687 on 2m and 225 on 70cm. We look forward to the results being released.

For the rest of the year, we are looking for a suitable site for the 2m Trophy Contest, 1st and 2nd September, as the Parallel Lines Contest Group traditionally operate from a site close to Dover so that it is not practical to use our site, there.

We plan to operate in the October UHF Contest, 6th and 7th October, on both 70cm and 23cm when we hope that the new 23cm system will be able to show its true potential.

We also plan to enter the December 2m Affiliated Societies Contest.

A change in the RSGB Contest Rules from 2017 will enable CARC to register as a National Club, so that all members, irrespective of station location, will be able to contribute to the Club score.

In addition to these major contests team members operate frequently in the UK Activity Contests and other minor contests throughout the year. We welcome new members to the team, whether seasoned operators or new licensees. Proficient CW operators are especially welcome. If you are interested in VHF/UHF Contesting, please contact Mike Davies, G0KAD to be added to our Group mailer so that you can be kept up-to-date with CARCRATS news.

73

Alwyn Seeds, G8DOH

STOP PRESS – VHF NFD Results:

G5LK/P came 2nd overall, with a normalised score of 3,066 against the winning score of 3,628 made by the Colchester VHF Group. Individual band results were 4th on 6m, 4th on 4m, 1st on 2m and 2nd on 70cm.

Our next major contest will be the October UHF Contest on October 6th and 7th, when we will again be operating from Dover. All are welcome to join us.

Numbers of UK Licenced Amateurs

Daryl Spence M0TTY (not a CARC member) made a Freedom of Information request of Ofcom asking for the above. Their response was as follows broken down by prefix:

2E0	8612
2E1	1596
G0	8615
G1	4910
G2	164
G3	4631
G4	9157
G5	58
G6	4901
G7	5829
G8	4837
M0	8363
M1	2275
M3	9961
M5	297
M6	13777

Grand Total 87983

Of course a lot of the M6's have moved on and become 2E0's or M0's so are counted once, twice or thrice (I hold 3 licences but don't ask me the point of that – Ed.).

Interesting reading nonetheless.

Antenna Analyser Project

CARC Antenna Analyser Kit Progress Report

All 20 kits have now been assembled, sold to members and delivered. Kit no 20 is still awaiting a display without cracks. (Don't some people want everything?)

The latest software is version 3.7.1 This adds more features including the ability to calibrate the log amplifiers. Constructors will also find it useful to un-remark the last line of the .h file so as to show the forward and reverse voltages to the antenna. Some people have found the analyser does not read correctly after upgrading to 3.7.1 In these cases the problem can usually be resolved by erasing the eprom (in the maintenance menu) and reloading the software.

The simple hardware changes proposed by Brian Minnis greatly improve the accuracy of SWR readings on noisy bands and should be implemented. These modifications involve removing a three-resistor attenuator on the main board and replacing a 3.9k smd resistor on the DDS module with 1.8k. Adrian Wood is available most Sunday mornings to assist with changing the resistor, for those of us whose failing eyesight prevents us from tackling this ourselves.

The project has not been without it's challenges. Obtaining the DDS modules and 3.5" displays has been something of a nightmare with numerous battles for refunds, not always successful. The published design gave less than accurate SWR readings and the redesigned version using logarithmic amplifiers instead of diode detectors fixed one problem and introduced another.

The antenna analyser has proven to be a whole-of-club project with many members making a contribution. In particular I acknowledge David M0WID for software and calibration improvements, Brian M0KGW for solving the lack of output problem, Richard G4ANN for prototyping and software uploading and Adrian G3VJM for designing and printing boxes so that for once this project doesn't have to lie around with wires hanging out of it. Collectively we've come up with a handy instrument at a modest price.

I've been asked about the next project. From the vote we took last year it should be an rf power meter, but we'll have a little break until everyone finishes their analysers.
Alan M0IJP, VK5ZFJ

Poundshop Power Banks

These neat little Signalex-branded power banks would seem to be a bargain for just one pound and can be raided both for the 18650 lithium cell and for the charge control module.

However they may not be quite as good as they first appear to be. Users have reported that the cells may rather less than the 1200mAh capacity claimed. Also the charging module draws a standing current which may flatten the cell much faster than you expect.

The charging module is based on a MP3401A power management module. This has a linear regulator to charge the cell from a 5V mini-usb socket and a buck converter to generate 5V output for the USB A socket.

The best place to take a 5V output (if not using USB) is from the pin on the USB socket furthest from the black negative wire. It pays to remove the negative line from the 18650 before attempting to solder to the pin as if you succeed in shorting the positive output to the case of the socket, as I did, you'll find the module no longer works. There is internal protection in the MP3401 but that only protects the IC and not internal fuses within the pcb. I fixed mine with a jumper from the negative cell connection to the closest pin on the USB.

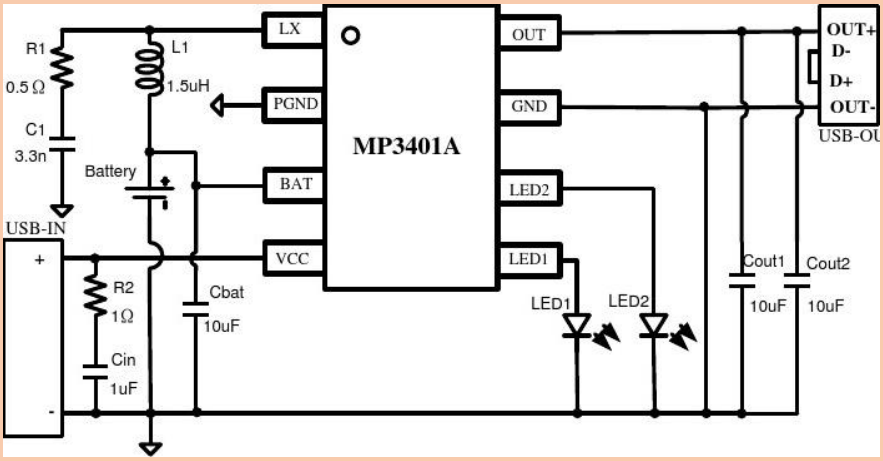

Machine Screw Sizes

Most of us have jars of screws lying around and rarely used because they are not sorted into sizes. With the electronic versions of vernier callipers now available on Amazon or Ebay for modest prices it is possible in most cases to determine thread sizes by measuring the outer diameter of the thread. This is always smaller than the nominal size, especially on small screws.

The attached table shows the diameter of the screws I have at home. I would welcome any additions or corrections. In making this list one thing that surprised me was that I didn't encounter a single Whitworth screw. When I worked in the 1970s for a small two-way radio manufacturer we used 1/8W and 3/32W for almost everything. For smaller sizes we used BA.

73

Alan Jamieson M0IJP VK5ZFJ

Digital Archives of Radio related magazines

Both Richard G3ZIY and Dominic G6NQO have recommended the following links as being an easy way to use up spare time!

The main link takes you to the archives for Radio News, an American mag, but if you click on “Bookshelf & International” up at the top, then United Kingdom, you can access a myriad of mags, including Practical Wireless, and Short Wave Listener

Link:
https://www.americanradiohistory.com/Radio_News_Master_Page_Guide.htm

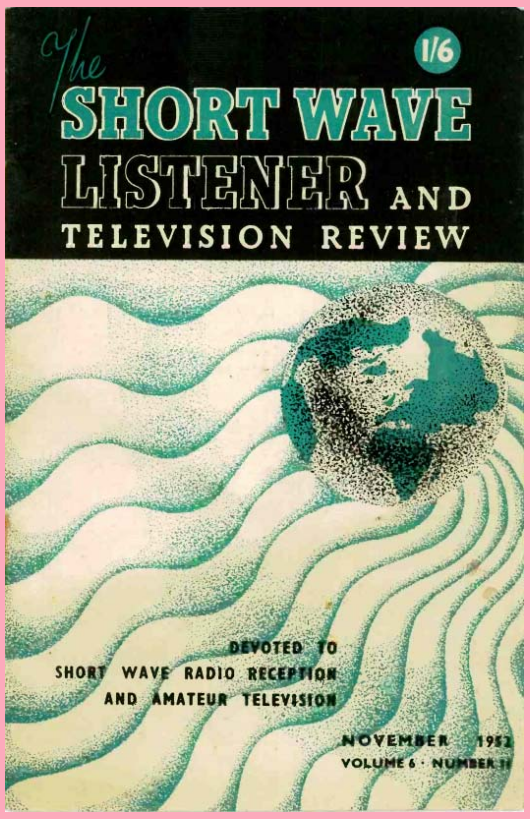

DMR Deliberations

Digital Receive Group Lists

I've recently come across some code plugs that caused the DMR radio to behave strangely. People were hearing stations calling CQ etc., so they responded to them and got no response, or got flamed by another amateur for calling over their transmission.

What I discovered was that the code plugs had more than one entry in the Digital Receive Group List they had used for that channel. What that effectively meant was that when monitoring that channel (GB7MH reflector 4400/Talk Group 2350 for example) their radio was listening to all the channels in the Digital Receive Group List. When they transmitted however, they were on the selected channel only; not necessarily the one they had heard the call on. A bit like scanning several channels on an FM radio, but responding on one particular channel, maybe not the one your scan had stopped on.

Personally, I have never found a need to use Digital Receive Group Lists, so every channel I select on the DMR radio transmits on the same channel it is listening to (with any repeater offsets etc., applied). But if you feel you really must use Digital Receive Group Lists, make sure there is **only one** entry in each Digital Receive Group List entry, and that that entry is the same as the channel you are using.

If I want to monitor a number of channels I simply put them into a scan list and program this scan list into the channel information. That way the transmit and receive frequencies remain together and you can safely respond to a call knowing you are not transmitting on a different channel.

So I recommend that code plugs are set up in the channel program window to Digital Receive Group List=none, and a scan list of your choice. Then I set one of the programmable side buttons to start/stop the scan function, and all seems to work well. See the circled features in my codeplug setup shown in the figures (see next page).

73 Richard G3ZIY

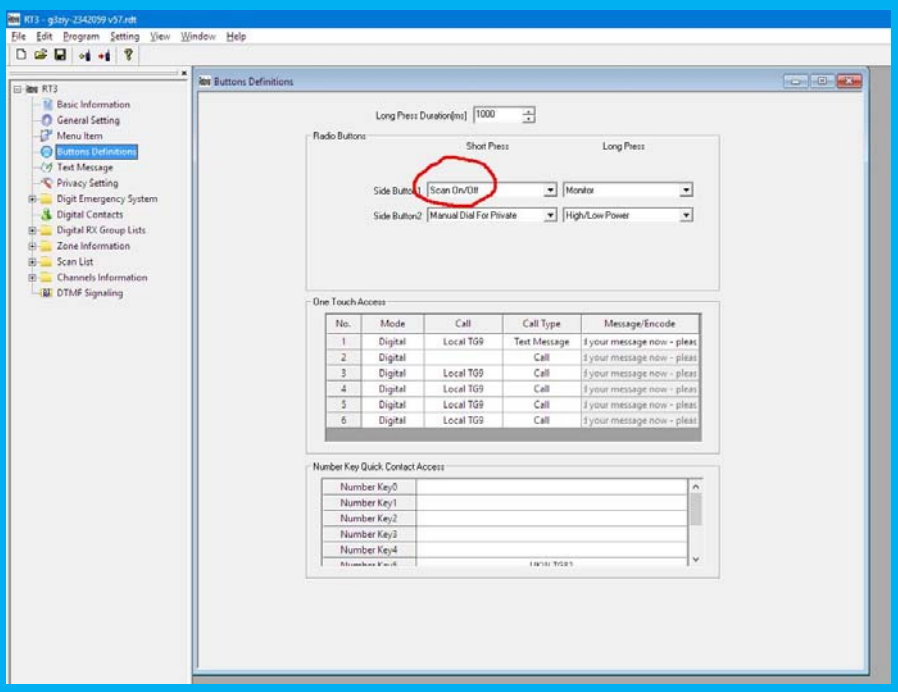
RT3 - g3ziy-2342059 v57.rdt
File Edit Program Setting View Window Help
RT3
Basic Information
General Setting
Menu Item
Buttons Definitions
Text Message
Privacy Setting
Digit Emergency System
Digital Contacts
Digital RX Group Lists
Zone Information
Scan List
Channels Information
DTMF Signaling
Buttons Definitions
Long Press Duration[ms] 1000
Radio Buttons
Short Press
Long Press
Side Button1 Scan On/Off
Monitor
Side Button2 Manual Dial For Private
High/Low Power
One Touch Access
No. Mode Call Call Type Message/Encode
1 Digital Local TG9 Text Message 1 your message now - pleas
2 Digital Call 1 your message now - pleas
3 Digital Local TG9 Call 1 your message now - pleas
4 Digital Local TG9 Call 1 your message now - pleas
5 Digital Local TG9 Call 1 your message now - pleas
6 Digital Local TG9 Call 1 your message now - pleas
Number Key Quick Contact Access
Number Key0
Number Key1
Number Key2
Number Key3
Number Key4

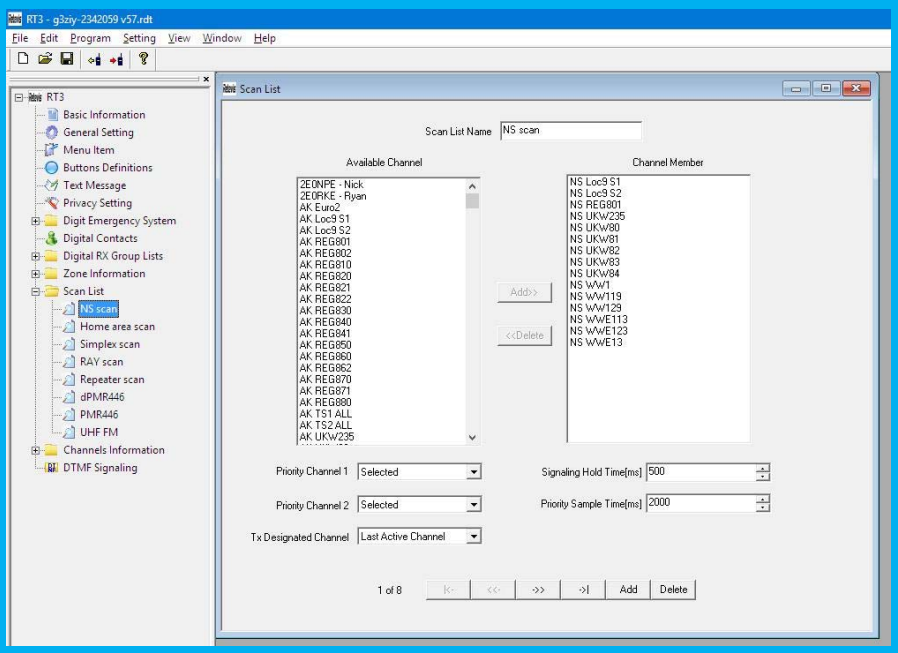
RT3 - g3ziy-2342059 v57.rdt
File Edit Program Setting View Window Help
RT3
Basic Information
General Setting
Menu Item
Buttons Definitions
Text Message
Privacy Setting
Digit Emergency System
Digital Contacts
Digital RX Group Lists
Zone Information
Scan List
NS scan
Home area scan
Simplex scan
RAY scan
Repeater scan
dPMR446
PMR446
UHF FM
Channels Information
DTMF Signaling
Scan List
Scan List Name NS scan
Available Channel
2E0NPE - Nick
2E0RKE - Ryan
AK Euro2
AK Loc9 S1
AK Loc9 S2
AK REG801
AK REG802
AK REG810
AK REG820
AK REG821
AK REG822
AK REG830
AK REG840
AK REG841
AK REG850
AK REG860
AK REG862
AK REG870
AK REG871
AK REG880
AK TS1 ALL
AK TS2 ALL
AK UKW235
Add>>
<<Delete
Channel Member
NS Loc9 S1
NS Loc9 S2
NS REG801
NS UKW235
NS UKW80
NS UKW81
NS UKW82
NS UKW83
NS UKW84
NS WW1
NS WW119
NS WW129
NS WWE113
NS WWE123
NS WWE13
Priority Channel 1 Selected
Signaling Hold Time[ms] 500
Priority Channel 2 Selected
Priority Sample Time[ms] 2000
Tx Designated Channel Last Active Channel
1 of 8
|<- <<- ->> ->| Add Delete

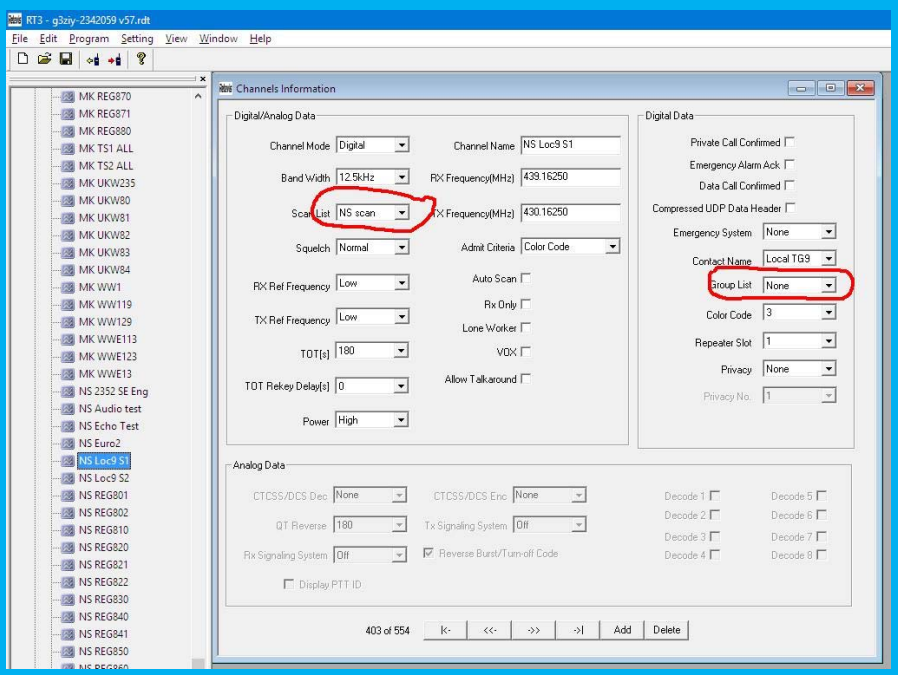
RT3 - g3ziy-2342059 v57.rdt
File Edit Program Setting View Window Help
MK REG870
MK REG871
MK REG880
MK TS1 ALL
MK TS2 ALL
MK UKW235
MK UKW80
MK UKW81
MK UKW82
MK UKW83
MK UKW84
MK WW1
MK WW119
MK WW129
MK WWE113
MK WWE123
MK WWE13
NS 2352 SE Eng
NS Audio test
NS Echo Test
NS Euro2
NS Loc9 S1
NS Loc9 S2
NS REG801
NS REG802
NS REG810
NS REG820
NS REG821
NS REG822
NS REG830
NS REG840
NS REG841
NS REG850
Channels Information
Digital/Analog Data
Channel Mode Digital
Channel Name NS Loc9 S1
Band Width 12.5kHz
RX Frequency(MHz) 439.16250
Scan List NS scan
TX Frequency(MHz) 430.16250
Squelch Normal
Admit Criteria Color Code
RX Ref Frequency Low
Auto Scan
Rx Only
TX Ref Frequency Low
Lone Worker
TOT[s] 180
VOX
TOT Rekey Delay[s] 0
Allow Talkaround
Power High
Digital Data
Private Call Confirmed
Emergency Alarm Ack
Data Call Confirmed
Compressed UDP Data Header
Emergency System None
Contact Name Local TG9
Group List None
Color Code 3
Repeater Slot 1
Privacy None
Privacy No. 1
Analog Data
CTCSS/DCS Dec None
CTCSS/DCS Enc None
QT Reverse 180
Tx Signaling System Off
Rx Signaling System Off
Reverse Burst/Turn-off Code
Display PTT ID
Decode 1
Decode 2
Decode 3
Decode 4
Decode 5
Decode 6
Decode 7
Decode 8
403 of 554
|<- <<- ->> ->| Add Delete

Dates for your diary:

Sunday September 9th – Microwave Round Table

Wednesday September 26th – Surplus Equipment Sale

Wednesday October 24th – FPGA's by Alister G3ZBU (TBC)

Wednesday November 28th – HARC/CARC Challenge

Friday December 7th – Annual Fish and Chip Supper

Weds Jan 23rd 2019 – Annual General Meeting

For Sale or Wanted

- Monochrome Laser Printer Brother HL-1212W
  https://www.brother.co.uk/printers/mono-laser-printers/hl-1212w ,
  and a Canon K10395 photo quality 5 ink inkjet printer with some spare cartridges
  https://www.canon.co.uk/printers/inkjet/pixma/pixma_mg6450/
  Both these printers are in excellent working order, but are now surplus to my requirements as I have upgraded my printing arrangements.
  Sensible offers please to Richard at richardg3ziy@gmail.com
- Icom IC7100 with dedicated LDG IT100 antenna tuner, both in perfect condition with manual and box £700

also

- Yaesu FT857 with DSP, Collins SSB filter, extended coverage (60m), remote microphone MH-59A8J with manual and box £450

Dick Lupton M0RXZ (often behind tea bar on a Sunday!)
dicklupton2@gmail.com

Interesting Reads or Watches

What went wrong with Maplins (article)
https://www.retailgazette.co.uk/blog/2018/03/maplin-what-went-wrong/

The ICOM 7610 In Depth(video)
https://www.youtube.com/watch?v=IW-I-_5Hlro&feature=youtu.be

TX Factor (video series)
http://www.txfilms.co.uk/txfactor/

This week's GB2RS news on the web (audio)
http://www.txfilms.co.uk/txfactor/podcasts.html

Propagation and Solar Data (website)
http://www.hamqsl.com/solar.html

National Grid Dashboard – see how the country's energy is being created and used in real time
http://www.gridwatch.templar.co.uk/

Digital archives of Radio related magazines –

https://www.americanradiohistory.com/Radio_News_Master_Page_Guide.htm

Info Page

Local Repeaters

GB3MH: 145.625/88.5(FM) GB7MH: 439.6375(D-Star/DMR)

GB3NS: 439.675/82.5(FM) GB7NS: 439.1625(DMR) GB7ID: 430.975 (438.575)(FM/Fusion)

GB3HO: 430.8875/88.5 (438.4875)(FM) GB3HY: 430.900/88.5 (438.500)(FM)

Local DX Cluster GB7DXS : Telnet 81.149.0.149 Port 7300

Committee Members:

Keith Evans G3VKW - Chairman

John Pitty G4PEO – Vice Chairman, QSL Manager

Phil Moore M0TZZ - Hon. Secretary, Newsletter Editor, Exam Secretary

Howard Palmer G4PFW – Hon. Treasurer

John Longhurst G3VLH - Programme Secretary

Richard Hadfield G4ANN

Alex Sheppard M1YAP

Lead Training Instructor – Vacancy